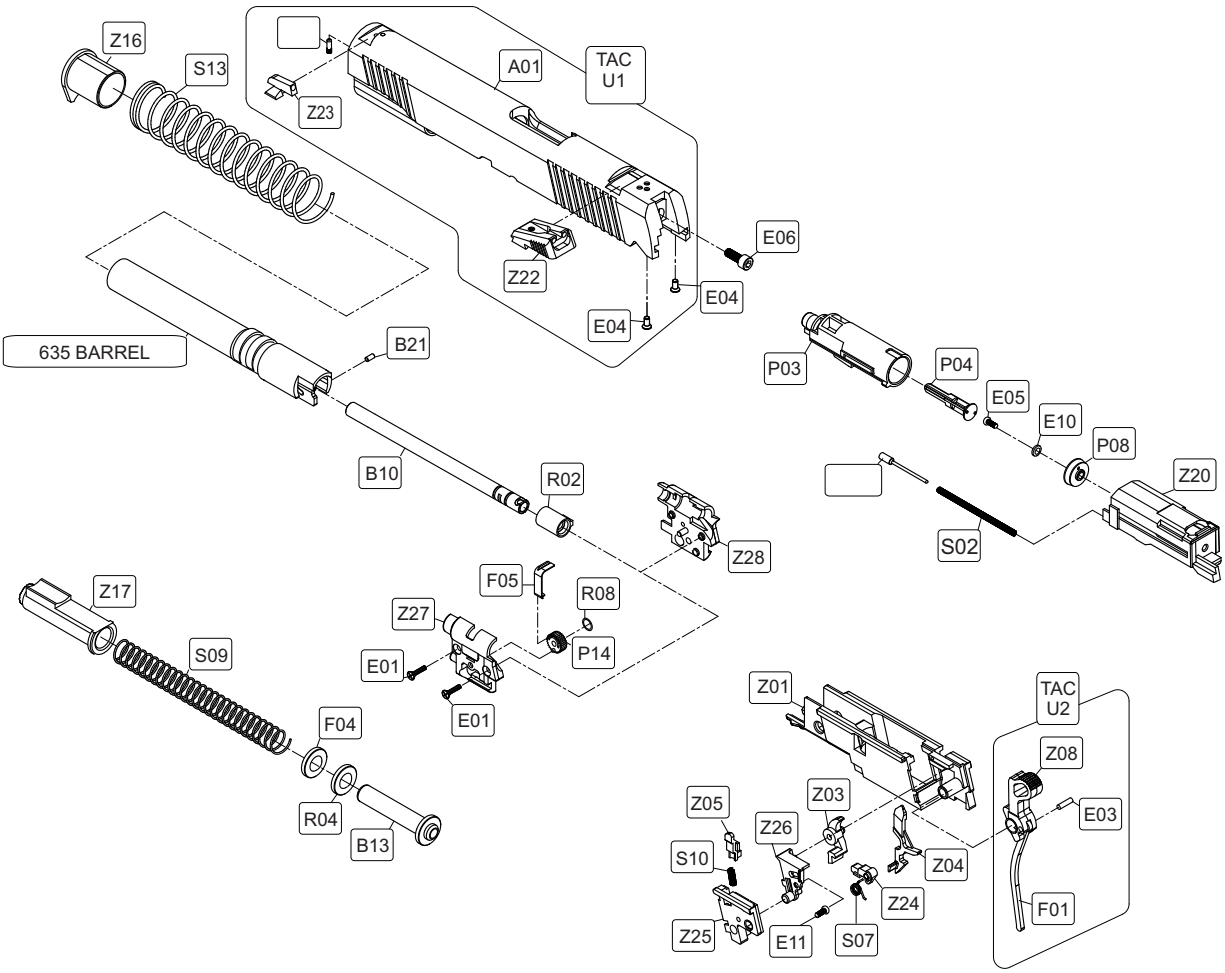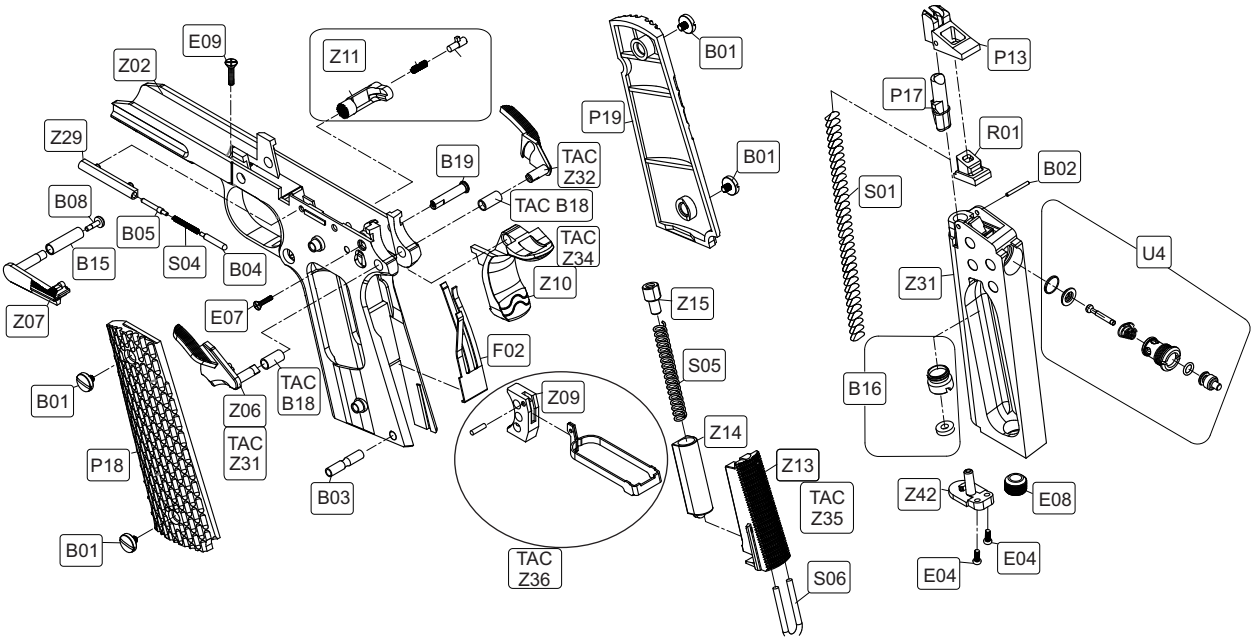635# SERIES
ELITE FORCE 1911
ELITE FORCE 1911 TAC