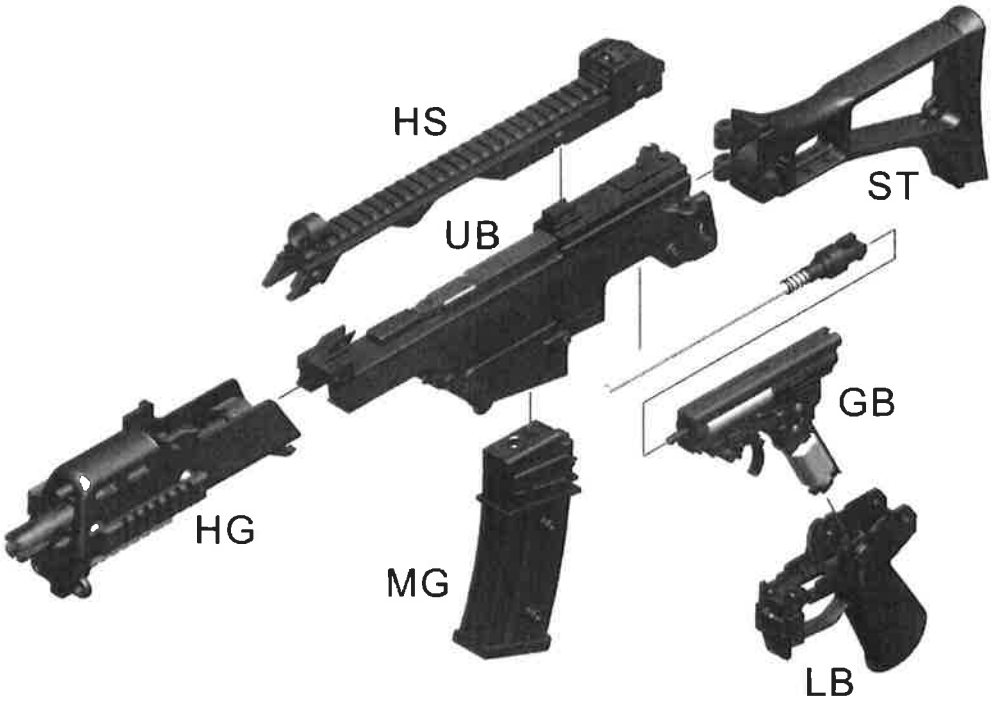
HS
ST
UB
GB
HG
MG
LB

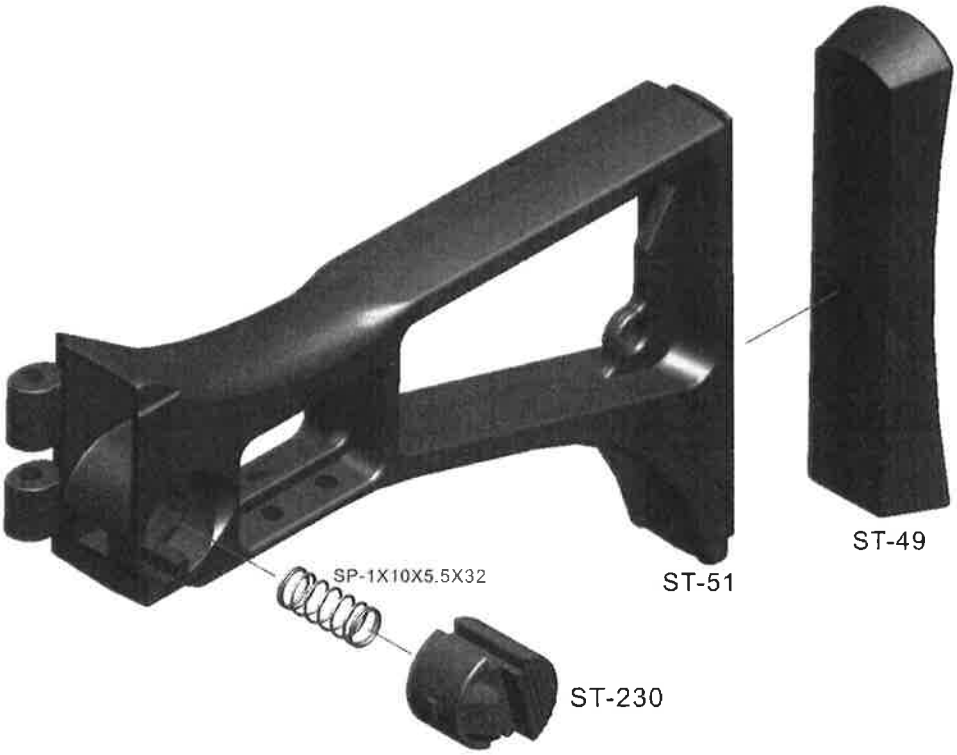
ST-49
SP-1X10X5.5X32
ST-51
ST-230

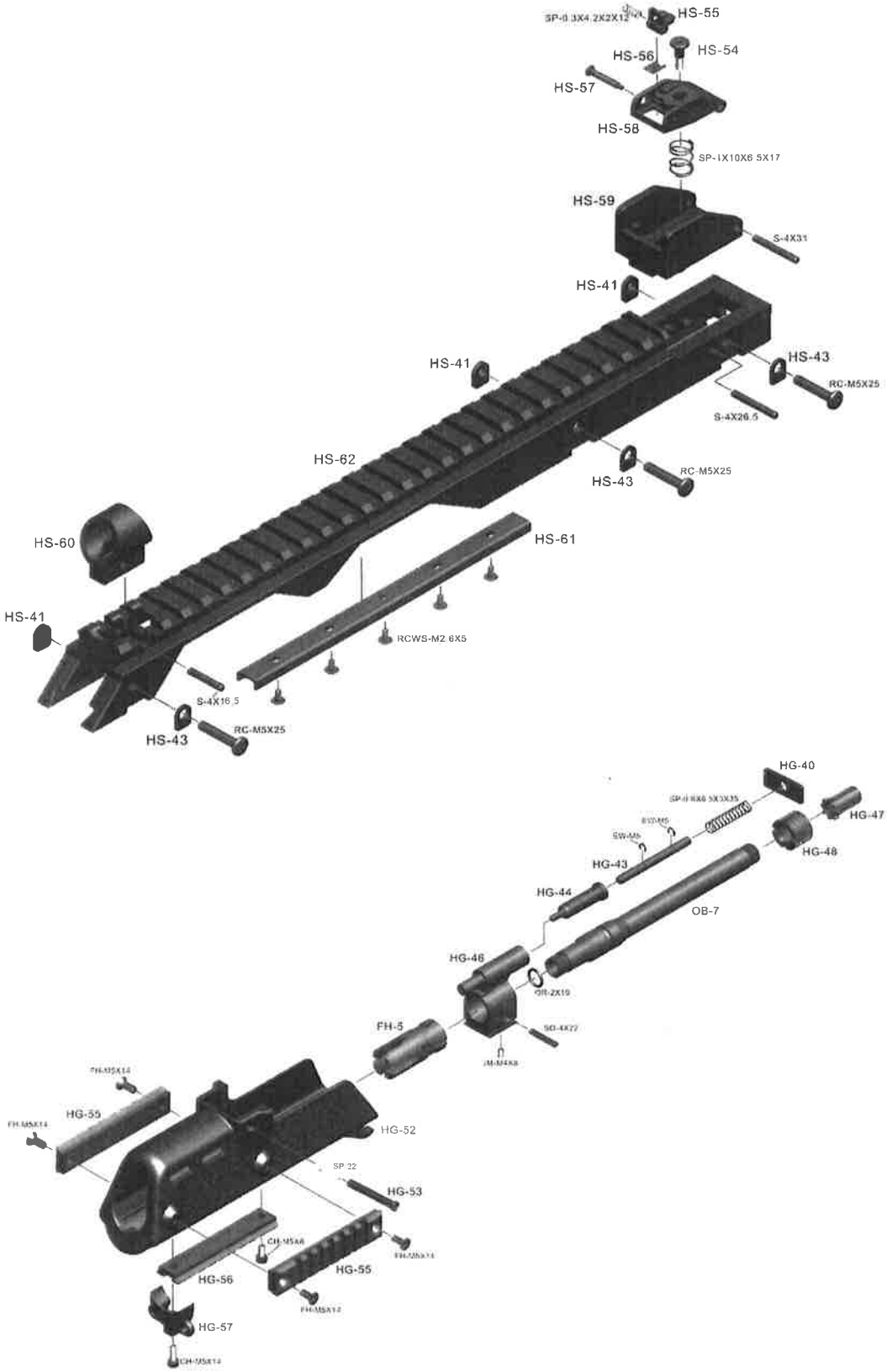
HS-55
HS-54
HS-56
HS-57
HS-58
SP-1X10X6.5X17
HS-59
S-4X31
HS-41
HS-41
HS-43
RC-M5X25
S-4X26.5
HS-62
HS-43
RC-M5X25
HS-60
HS-61
HS-41
RCWS-M2.6X5
S-4X16.5
HS-43
RC-M5X25
HG-40
HG-47
HG-48
HG-43
HG-44
OB-7
HG-46
FH-5
HG-55
HG-52
SP 22
HG-53
HG-56
HG-55
HG-57

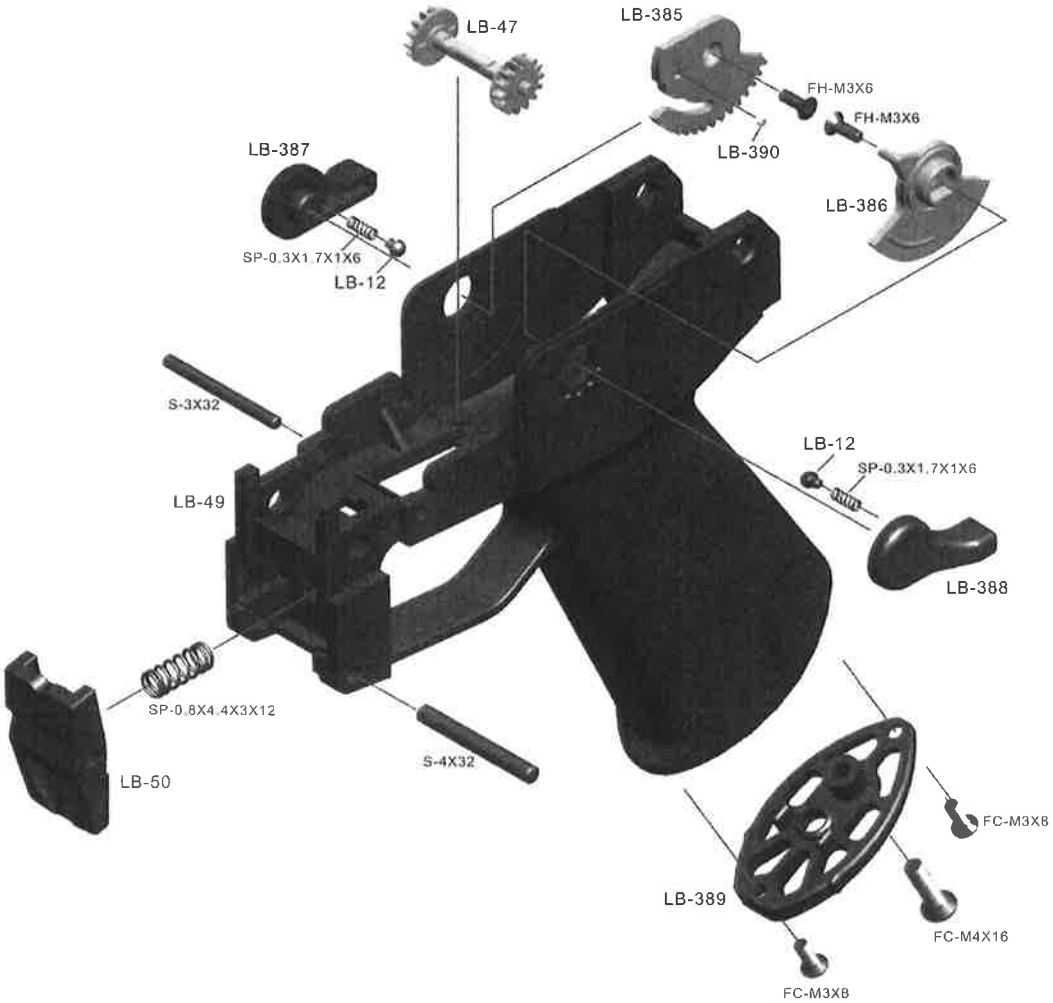
LB-47
LB-385
FH-M3X6
FH-M3X6
LB-390
LB-387
LB-386
SP-0.3X1.7X1X6
LB-12
S-3X32
LB-12
SP-0.3X1.7X1X6
LB-49
LB-388
SP-0.8X4.4X3X12
S-4X32
LB-50
FC-M3X8
LB-389
FC-M4X16
FC-M3X8

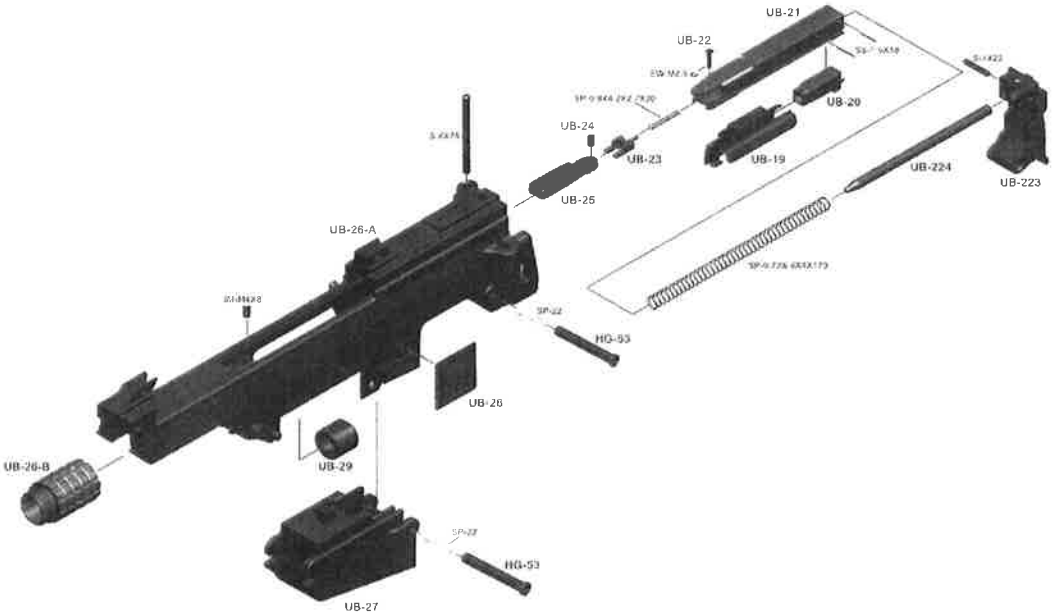
UB-21
UB-22
UB-20
UB-24
UB-23
UB-19
UB-224
UB-223
UB-25
UB-26-A
HG-53
UB-26
UB-29
UB-26-B
HG-53
UB-27

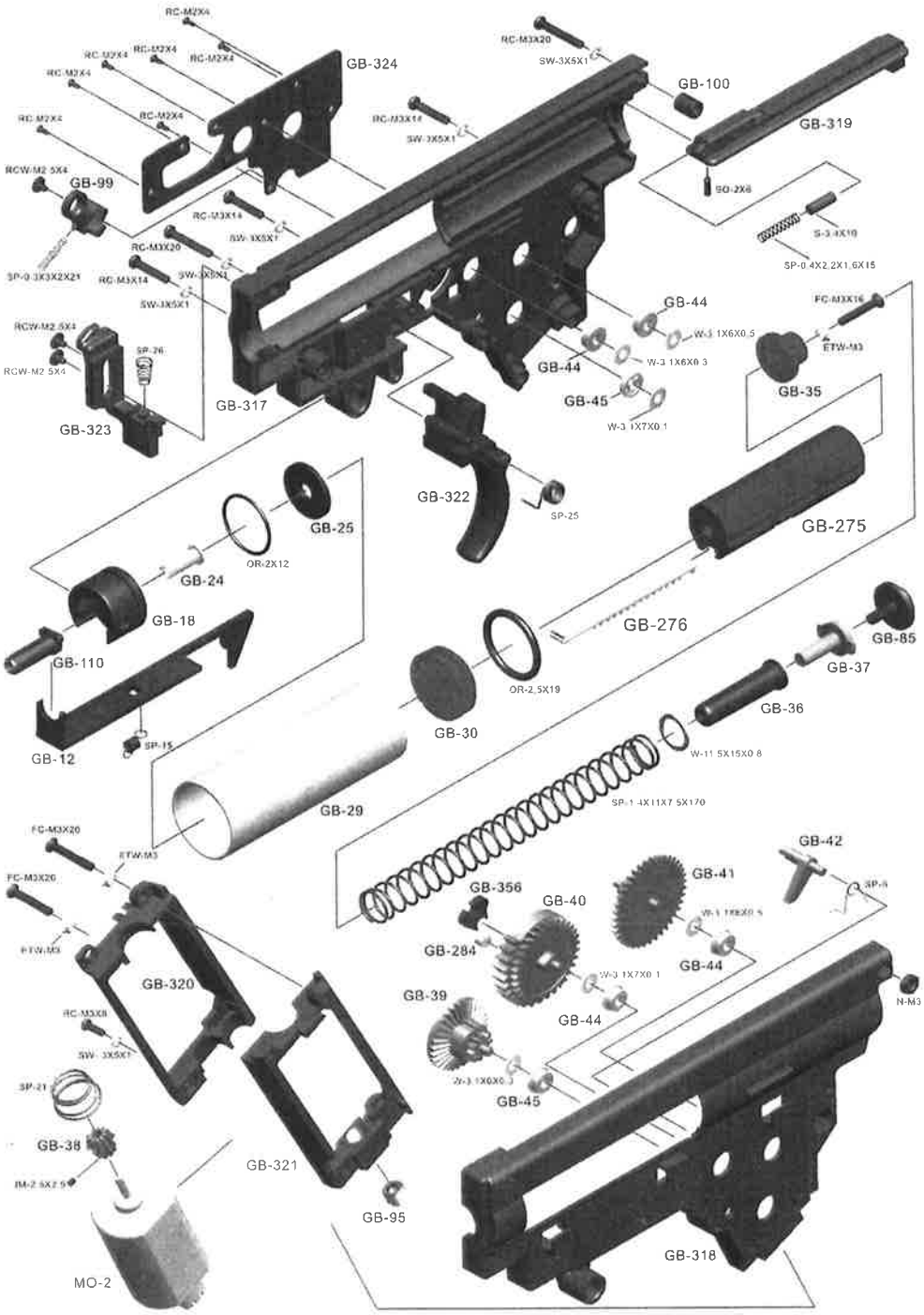
RC-M2X4
GB-324
RC-M3X20
SW-3X5X1
GB-100
GB-319
RC-M3X14
SW-3X5X1
SO-2X6
S-3.4X10
SP-0.4X2.2X1.6X15
RCW-M2.5X4
GB-99
RC-M3X14
SW-3X5X1
RC-M3X20
SP-0.3X3X2X21
RC-M3X14
SW-3X5X1
SW-3X5X1
GB-44
W-3.1X6X0.5
W-3.1X6X0.3
GB-44
GB-45
W-3.1X7X0.1
FC-M3X16
ETW-M3
GB-35
RCW-M2.5X4
SP-26
RCW-M2.5X4
GB-323
GB-317
GB-322
SP-25
GB-25
OR-2X12
GB-24
GB-18
GB-110
GB-12
SP-15
GB-275
GB-276
GB-85
GB-37
OR-2.5X19
GB-36
GB-30
W-11.5X15X0.8
SP-1.4X11X7.5X170
GB-29
FC-M3X20
ETW-M3
FC-M3X20
ETW-M3
GB-320
RC-M3X8
SW-3X5X1
SP-21
GB-38
IM-2.5X2.5
MO-2
GB-321
GB-95
GB-356
GB-40
GB-41
GB-42
SP-4
GB-284
W-3.1X7X0.1
GB-44
GB-39
GB-44
GB-45
N-M3
GB-318

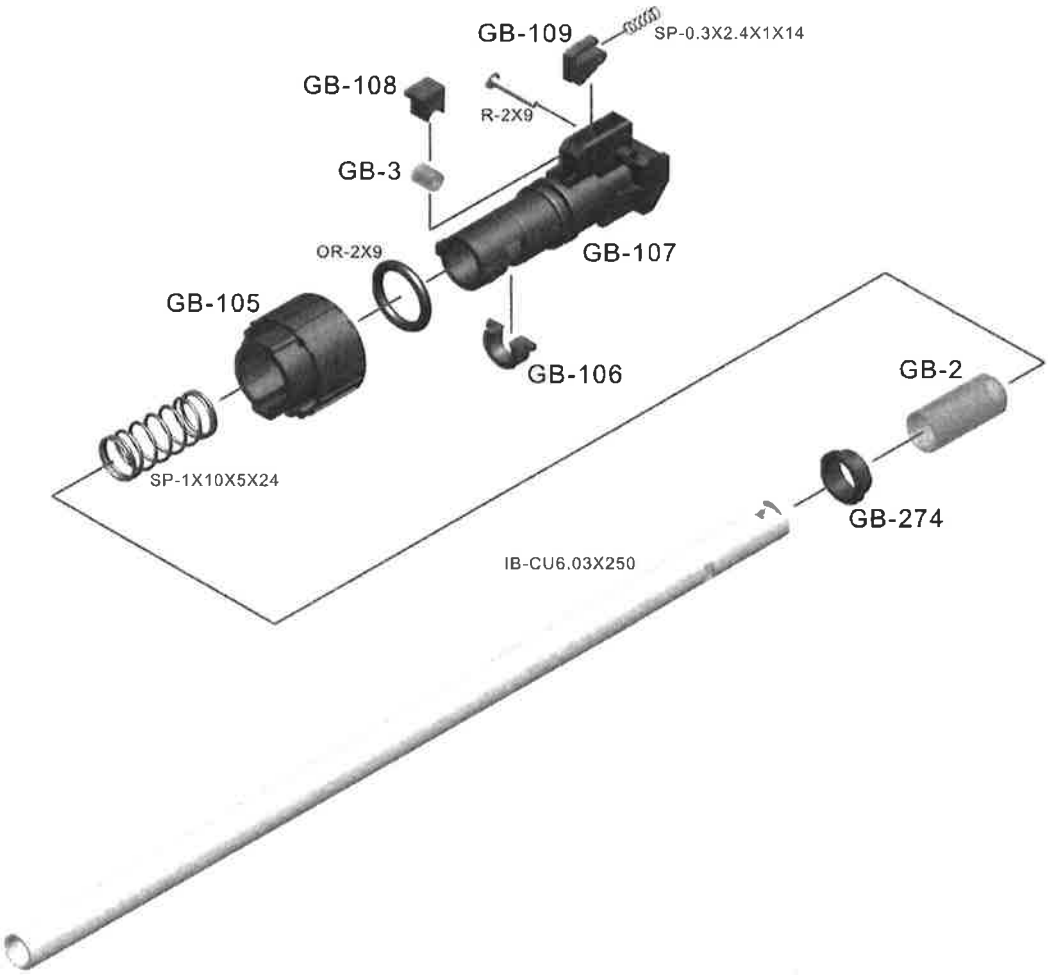
GB-109
SP-0.3X2.4X1X14
GB-108
R-2X9
GB-3
OR-2X9
GB-107
GB-105
GB-106
GB-2
SP-1X10X5X24
GB-274
IB-CU6.03X250