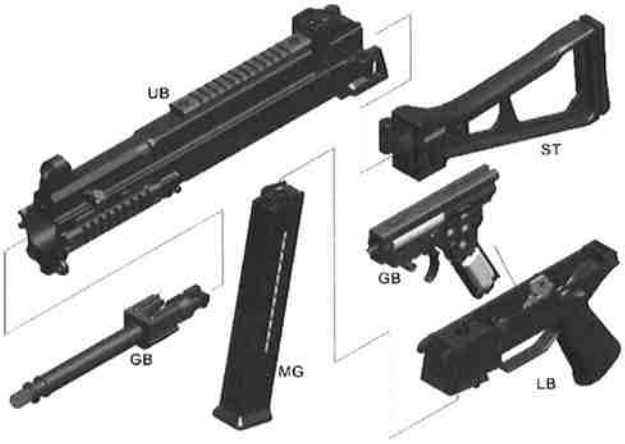
UB
ST
GB
GB
MG
LB

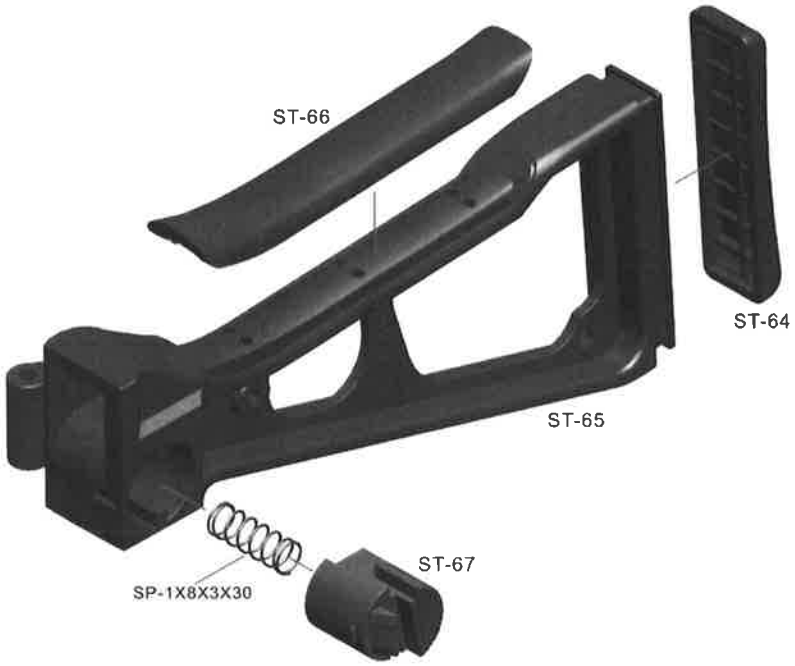
ST-66
ST-64
ST-65
ST-67
SP-1X8X3X30

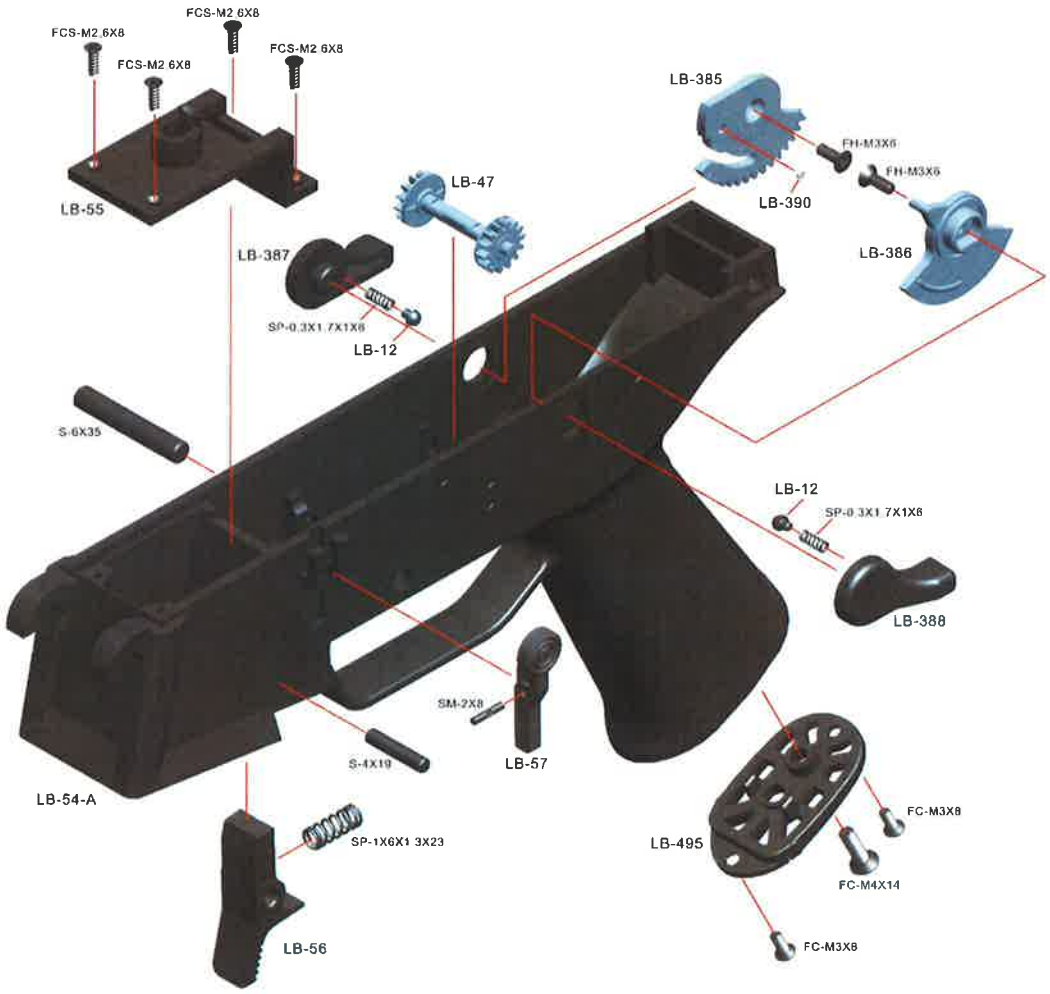
FCS-M2.6X8
FCS-M2 6X8
FCS-M2 6X8
FCS-M2 6X8
LB-385
FH-M3X6
FH-M3X6
LB-390
LB-47
LB-55
LB-387
LB-386
SP-0.3X1.7X1X6
LB-12
S-6X35
LB-12
SP-0.3X1.7X1X6
LB-388
SM-2X8
S-4X19
LB-57
LB-54-A
FC-M3X8
SP-1X6X1.3X23
LB-495
FC-M4X14
LB-56
FC-M3X8

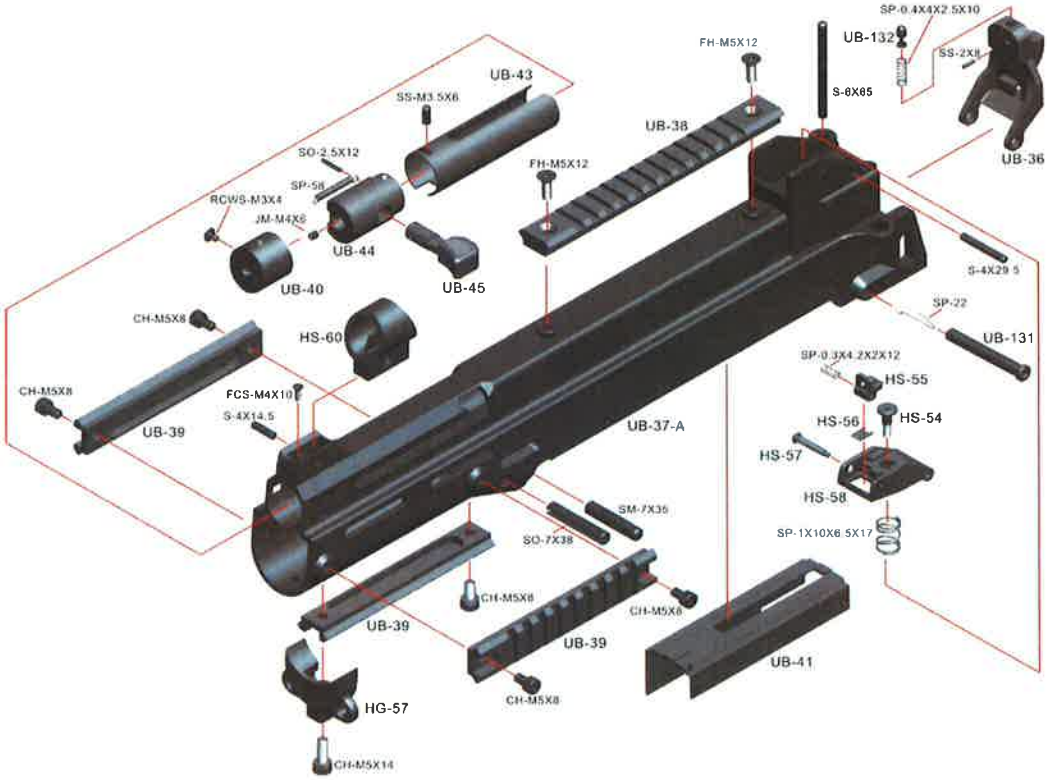
SP-0.4X4X2.5X10
UB-132
SS-2X8
FH-M5X12
S-8X85
UB-36
UB-43
SS-M3.5X6
UB-38
SO-2.5X12
SP-58
FH-M5X12
RCWS-M3X4
JM-M4X6
UB-44
UB-40
UB-45
S-4X29.5
SP-22
UB-131
CH-M5X8
HS-60
SP-0.3X4.2X2X12
HS-55
CH-M5X8
FCS-M4X10
S-4X14.5
UB-39
UB-37-A
HS-56
HS-54
HS-57
HS-58
SM-7X35
SP-1X10X6.5X17
SO-7X38
CH-M5X8
CH-M5X8
UB-39
UB-39
UB-41
CH-M5X8
HG-57
CH-M5X14

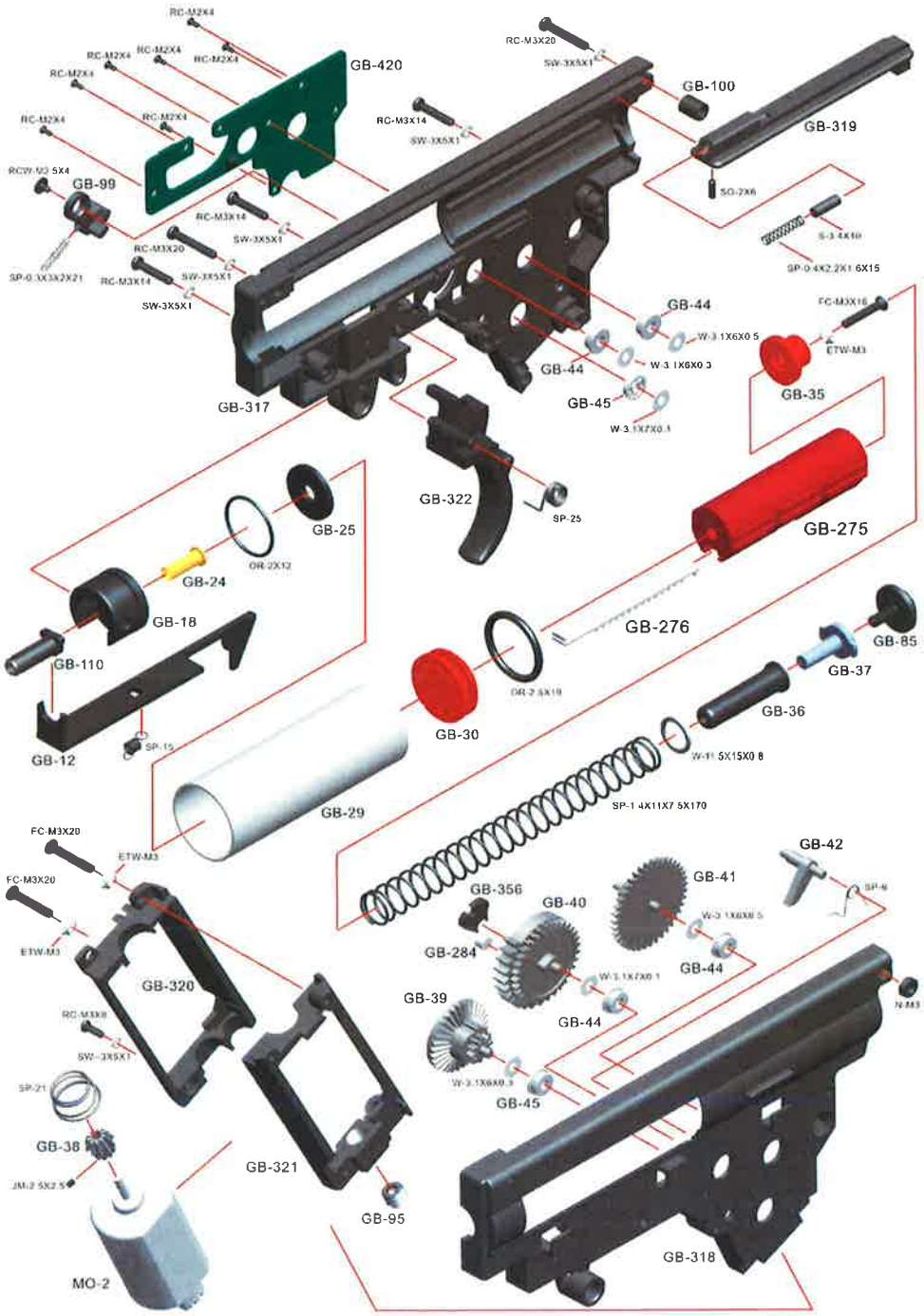
RC-M2X4
RC-M2X4
RC-M2X4
RC-M2X4
RC-M2X4
RC-M2X4
RC-M2X4
GB-420
RC-M3X20
SW-3X5X1
GB-100
GB-319
RC-M3X14
SW-3X5X1
SO-2X6
RCW-M3 5X4
GB-99
RC-M3X14
SW-3X5X1
RC-M3X20
SW-3X5X1
RC-M3X14
SW-3X5X1
SP-0.3X3X2X21
S-3.4X19
SP-0.4X2.2X1.6X15
GB-44
FC-M3X16
W-3.1X6X0.5
ETW-M3
GB-44
W-3.1X6X0.3
GB-35
GB-45
W-3.1X7X0.1
GB-317
GB-322
SP-25
GB-275
GB-25
OR-2X12
GB-24
GB-18
GB-276
GB-85
GB-110
GB-37
OR-2.3X19
GB-36
GB-30
GB-12
SP-15
W-11.5X15X0.8
GB-29
SP-1.4X11X7.5X170
FC-M3X20
ETW-M3
GB-42
FC-M3X20
GB-356
GB-41
GB-40
SP-6
ETW-M3
GB-284
W-3.1X6X0.5
GB-44
GB-320
W-3.1X7X0.1
GB-39
GB-44
N-M3
RC-M3X8
SW-3X5X1
W-3.1X6X0.3
GB-45
SP-21
GB-38
GB-321
JM-2.5X2.5
GB-95
GB-318
MO-2

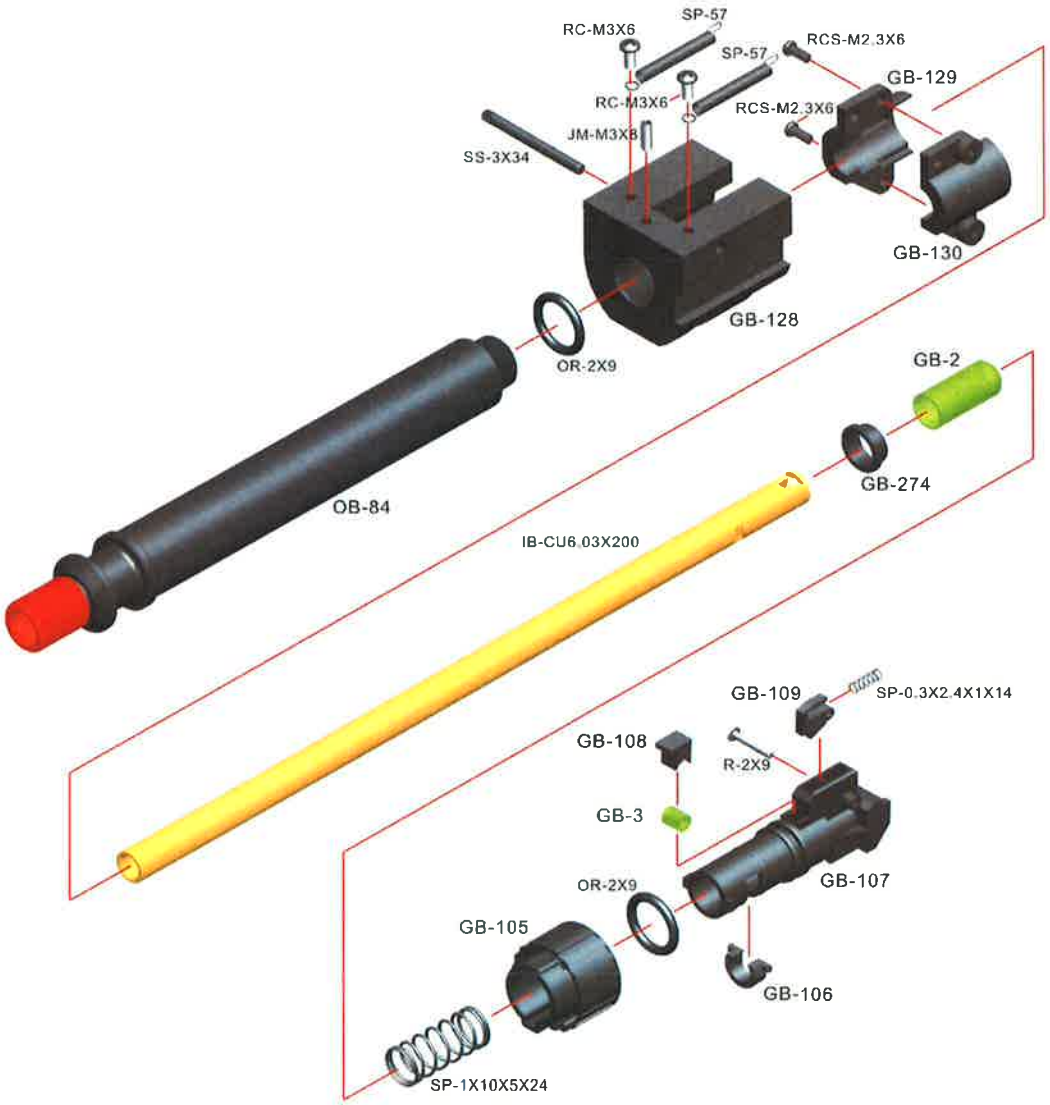
RC-M3X6
SP-57
RCS-M2.3X6
SP-57
GB-129
RC-M3X6
RCS-M2.3X6
JM-M3X8
SS-3X34
GB-130
GB-128
OR-2X9
GB-2
GB-274
OB-84
IB-CU6.03X200
GB-109
SP-0.3X2.4X1X14
GB-108
R-2X9
GB-3
GB-107
OR-2X9
GB-105
GB-106
SP-1X10X5X24